Cyanide Analysis with the CNSolution 3100

O·I·Analytical

CNSolution 3100

- Rapidly Analyze Cyanide with Confidence in Results
  - Free Cyanide
  - Available Cyanide
  - Total Cyanide
- Eliminate Time Consuming, Error Causing Distillations
- Expand Capability to Colorimetric FIA and SFA

O·I·Analytical

Flow Solution 3100

- Flow Injection Analyzer
  - Colorimetric detector added it becomes the FS 3100 FIA analyzer
  - All FS 3100 methods
    - NO_3-N
    - NH_3-N
    - PO_4
    - TKN

O·I·Analytical

OIA 1677 - CNSolution

Detector

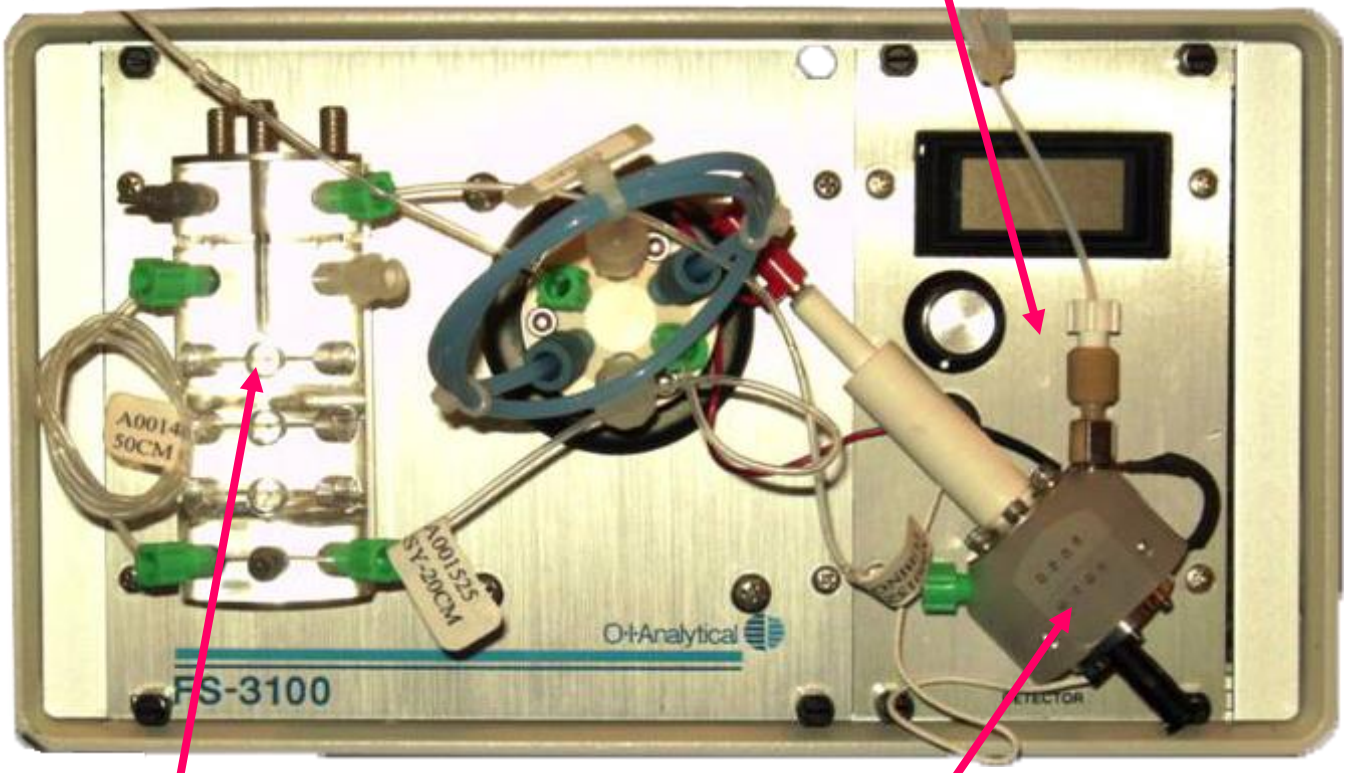

Gas Diffusion and Mixing

Flow-cell

O·I·Analytical

Advantages - CNSolution 3100

Free CN	GD-Amperometry	ASTM D7237
WAD CN	Distillation/ Colorimetry	ASTM D2036 or SM4500
CATC	Distillation/ Colorimetry	ASTM D2036 or SM4500
Available CN	GD-Amperometry	OIA 1677 or ASTM D6888

One Instrument – multiple methods

O·I·Analytical

Advantages - CNSolution 3100

Total Cyanide	Distillation/ Colorimetry	EPA 335.4
	Distillation / GD-Amperometry	ASTM D7284
	No Distillation / GD-Amperometry	OIA 1678 (ASTM D7511-09)

One Instrument – multiple methods

O·I·Analytical

Lowest Operating Cost

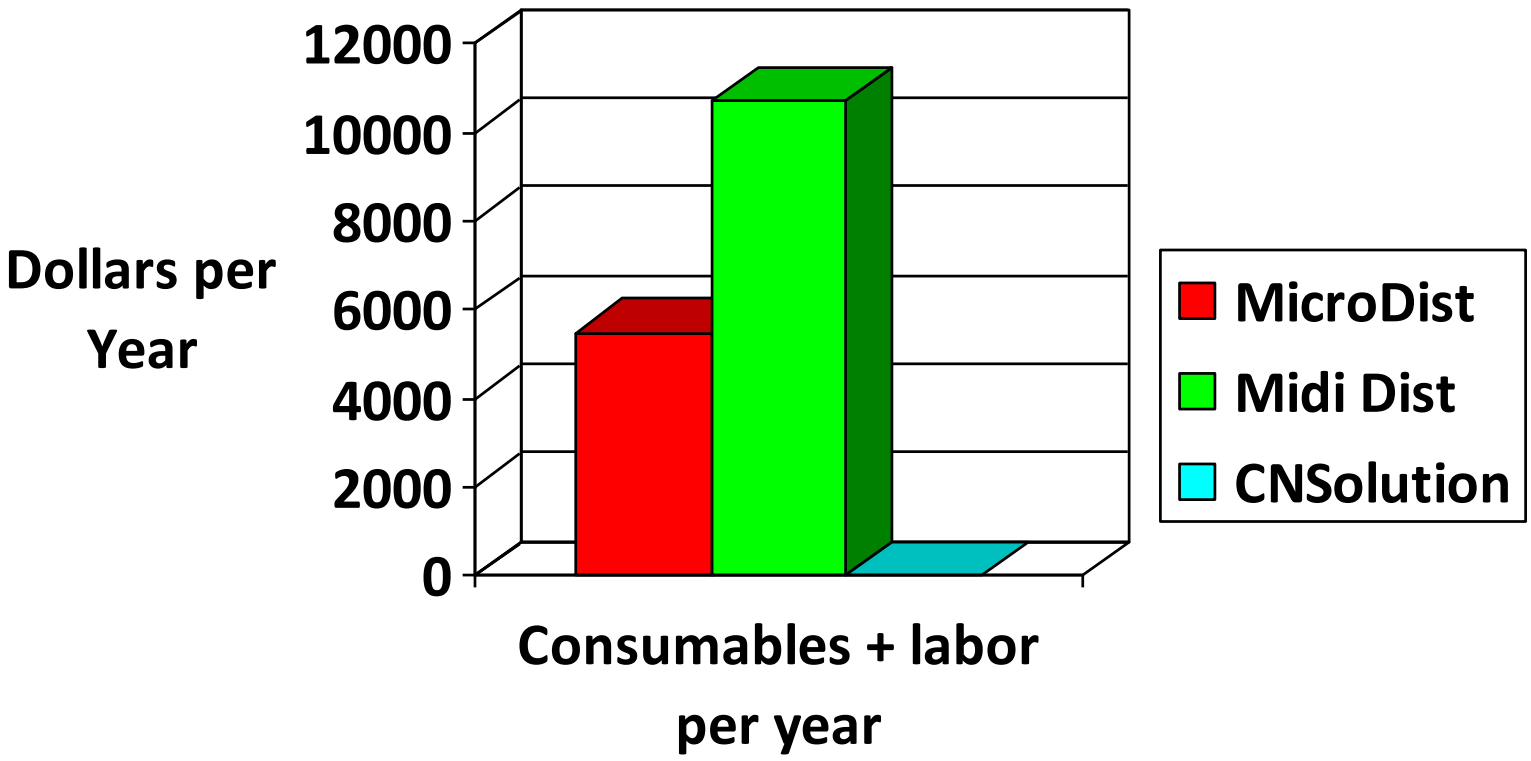

O·I·Analytical

Highest Throughput

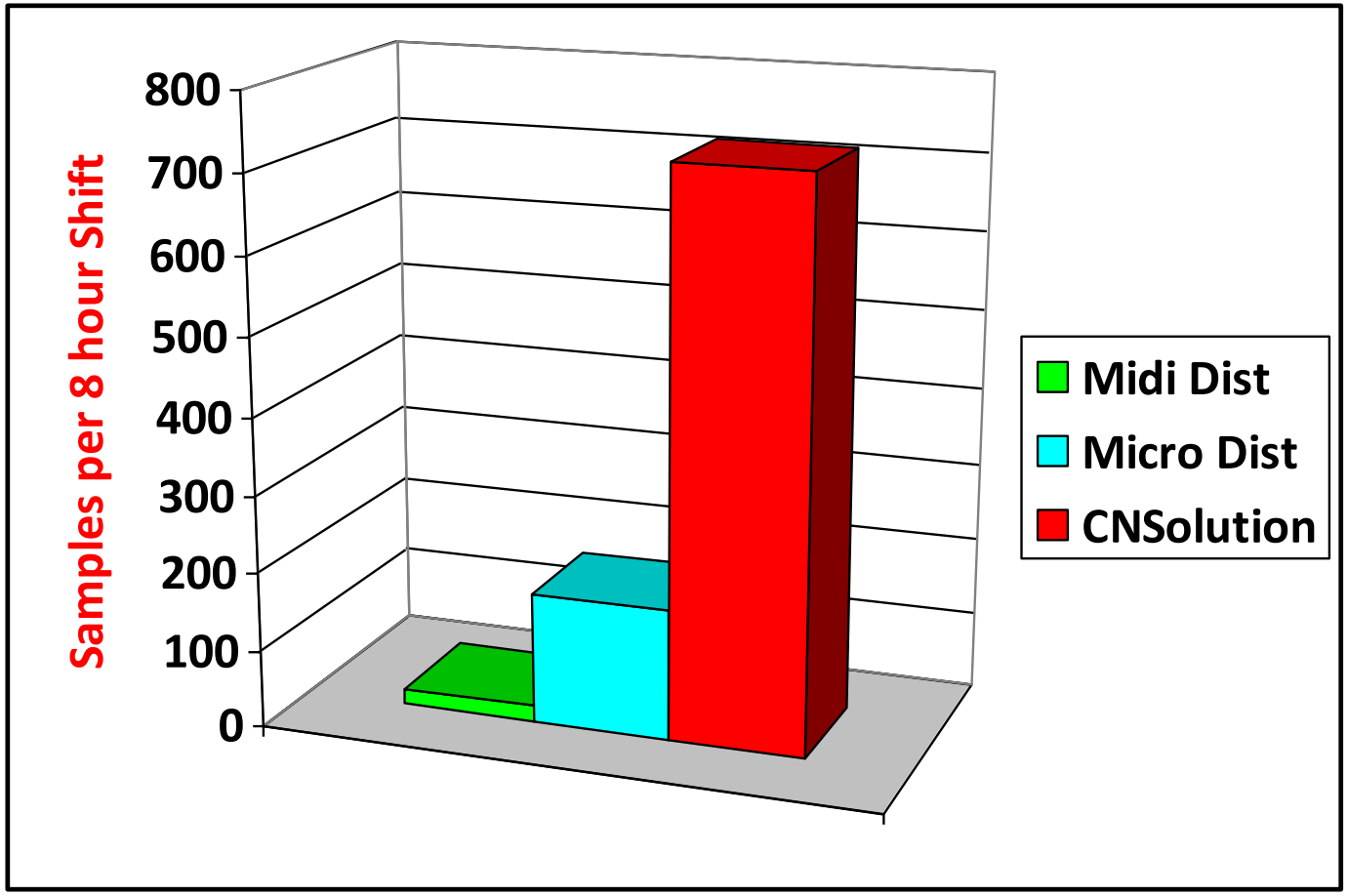

O·I·Analytical

Automated Aquatic Free CN

Method	Description	Measurement
ASTM D 7237	FIA	Gas Diffusion-Amperometry

The only automated Free Cyanide Method

O·I·Analytical

ASTM D7237-06

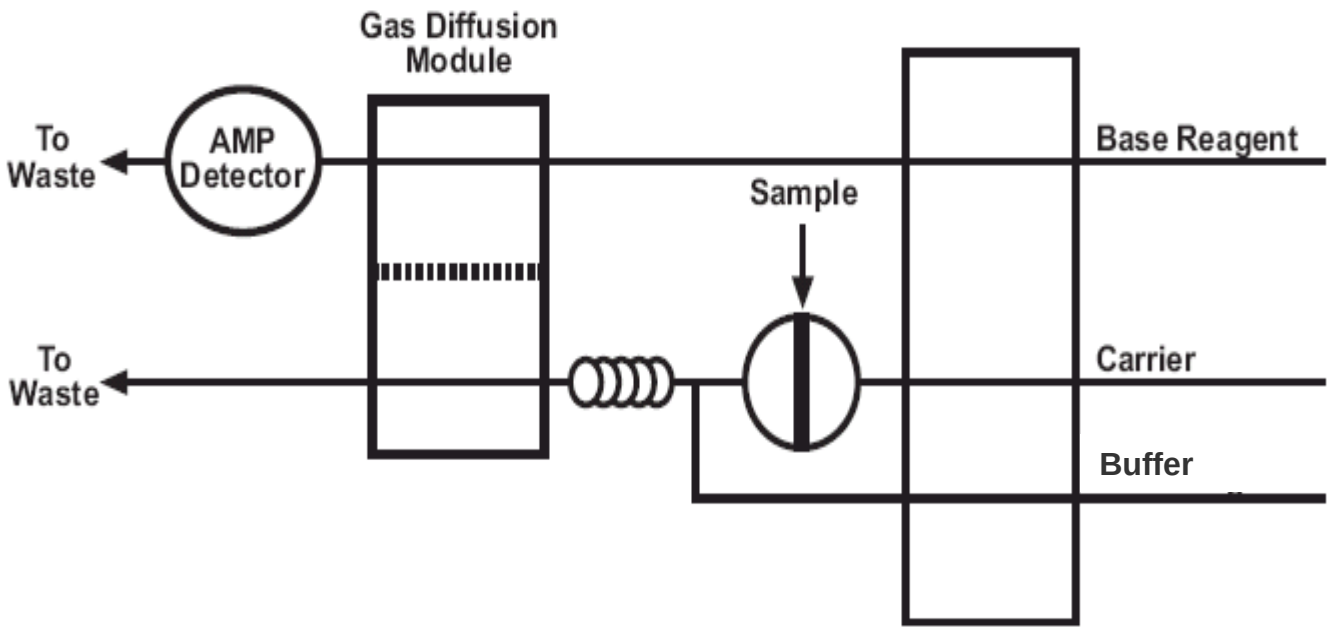

Same Cartridge as OIA 1677

O·I·Analytical

Accurate and Easy to Use

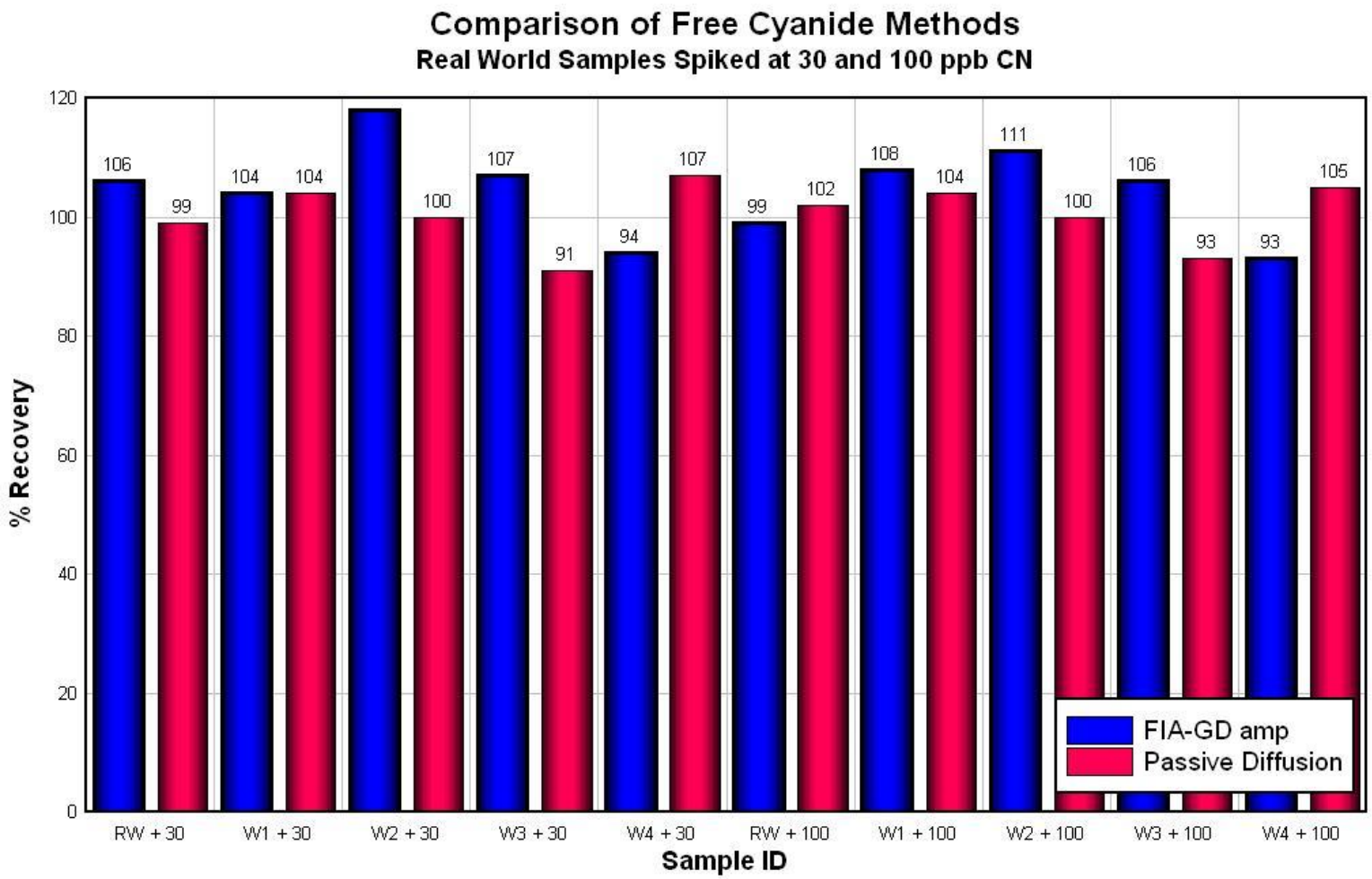

O·I·Analytical

Amenable Cyanide—CATC

Method Number	Description	Measurement
SM 4500-CN G	Alkaline Chlorination/ Manual Distillation	Colorimetry
ASTM D 2036	Alkaline Chlorination/ Manual distillation	Colorimetry, Gas Diffusion - Amperometry

O·I·Analytical

WAD Cyanide

Method Number	Description	Measurement
SM 4500-CN I	Buffered pH 4.5 manual Distillation	Colorimetry
ASTM D 2036	Buffered pH 4.5 manual distillation	Colorimetry, Gas Diffusion - Amperometry

O·I·Analytical

Available Cyanide

Method Number	Description	Measurement
OIA 1677	Ligand Exchange / Flow Injection Analysis	Gas Diffusion - Amperometry
ASTM D 6888	Ligand Exchange / Flow Injection Analysis	Gas Diffusion - Amperometry

No Distillation Required

O·I·Analytical

Sulfide Abatement

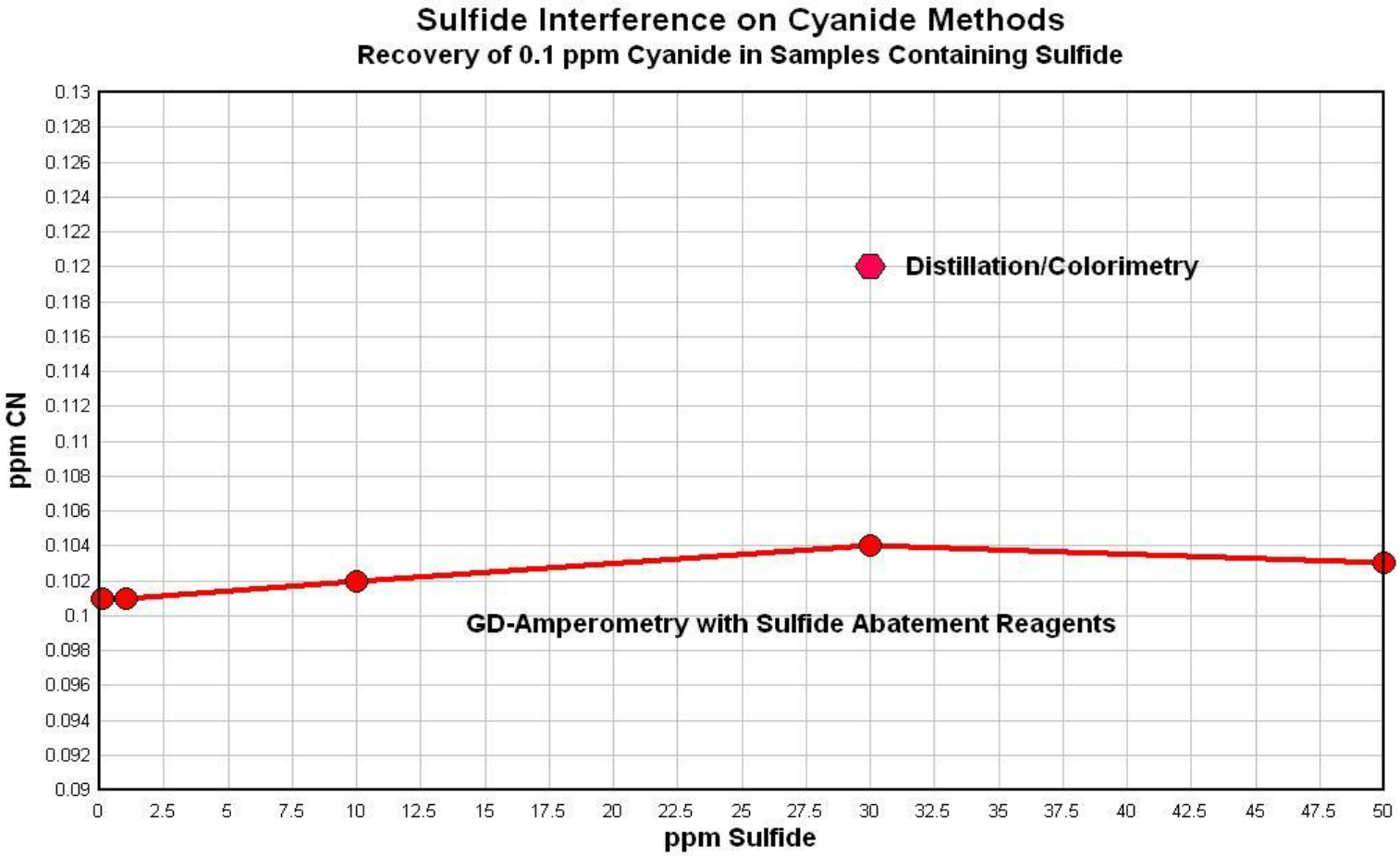

GD Amperometry = No Sulfide Interference

O·I·Analytical

Quantitative Recovery

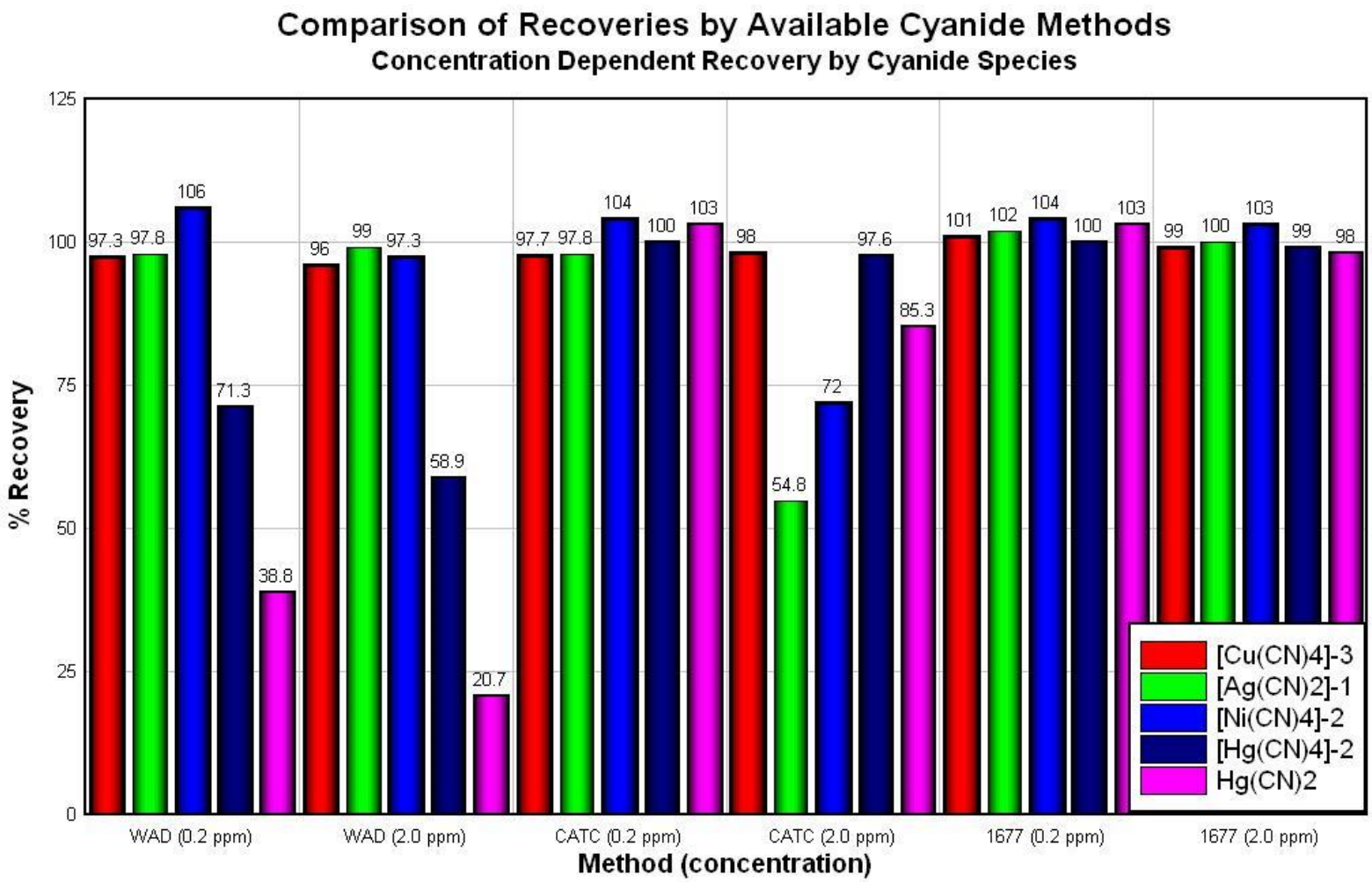

O·I·Analytical

Precise and Accurate Results

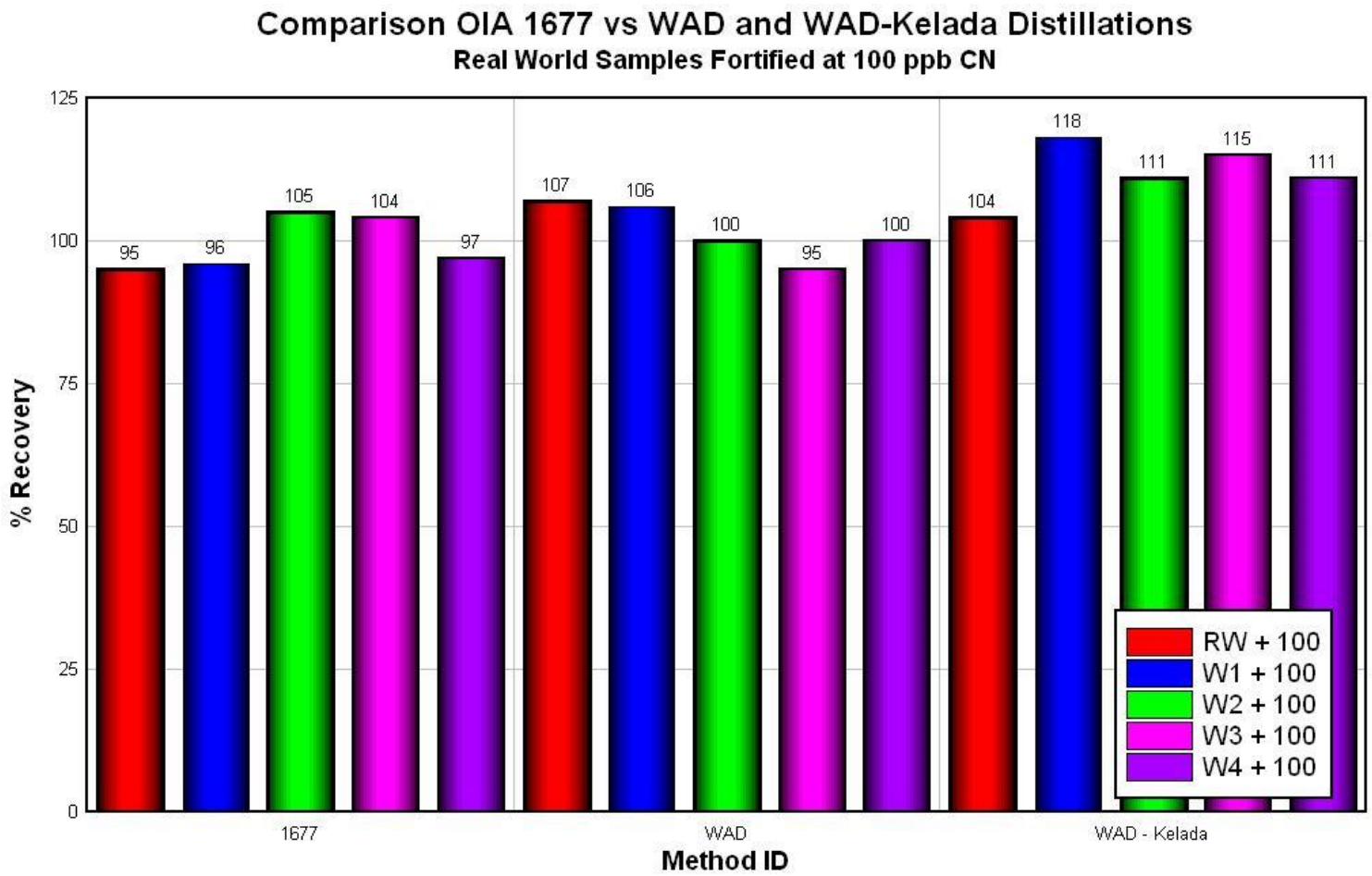

O·I·Analytical

Method Interferences

CATC	WAD	OIA 1677
N-organics	Excessive Iron Cyanide	None
SCN,NH_3,NO_2	Concentration Dependent	—
S_2O_3, H_2O_2	—	—
Concentration Dependent	—	—

O·I·Analytical

Analysis Times Compared

	CATC	WAD	OIA 1677
Sample Preparation	2 distillations 2 – 3 hours	1 distillation 2 – 3 hours	No distillation
Analysis	1 – 2 minutes	1 – 2 minutes	1 – 2 minutes
Total Time	3 – 4 hours	3 – 4 hours	1 – 2 minutes

More Samples per Hour

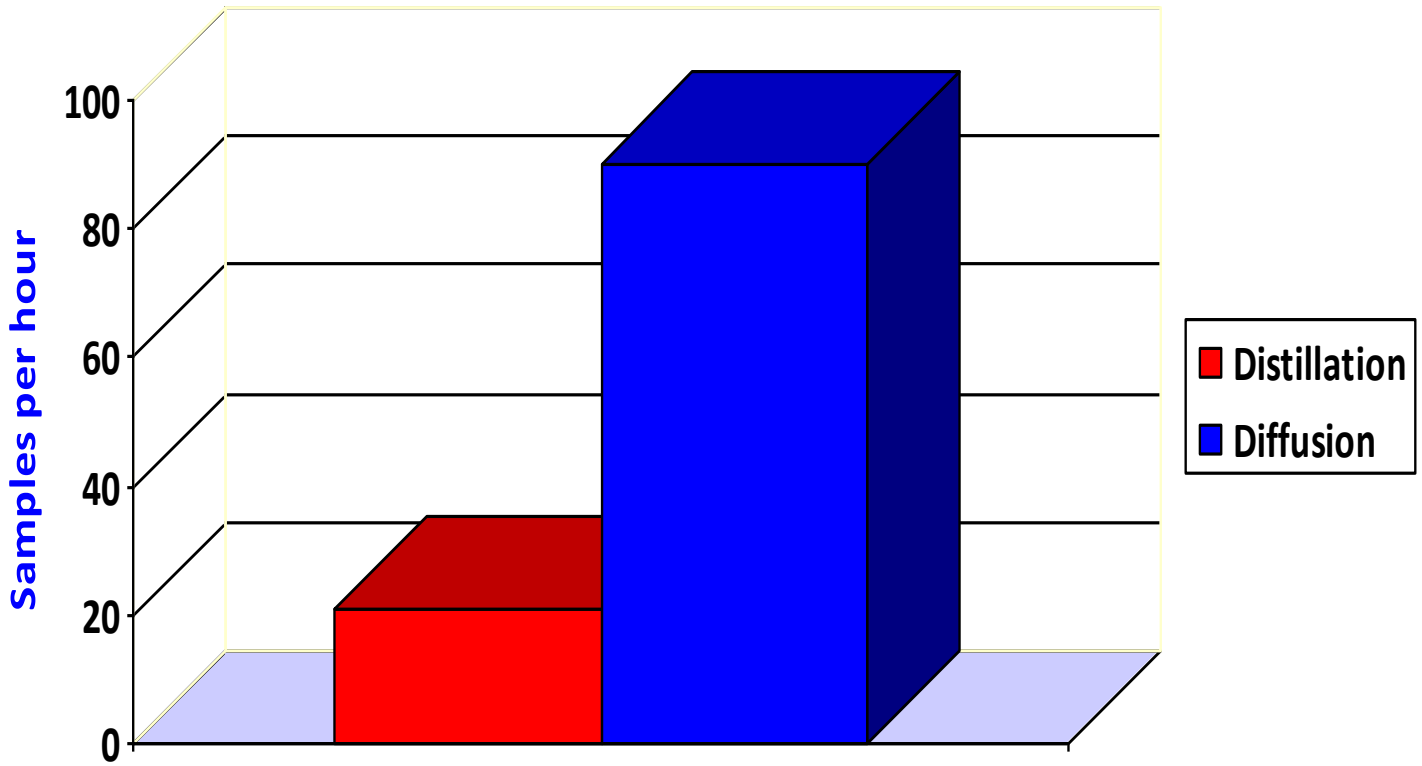

Gas Diffusion = More Samples

O·I·Analytical

Benefits of OIA 1677 / ASTM D6888-04

- No distillation (eliminates 1 – 4 hours preliminary sample treatment)
- Low MDL (0.5 ppb)
- No Interferences
- High Throughput
  (up to 90 samples per hour)
- Ease of Operation, very simple chemistry.

O·I·Analytical

Easy to Use and Understand

No pyridine

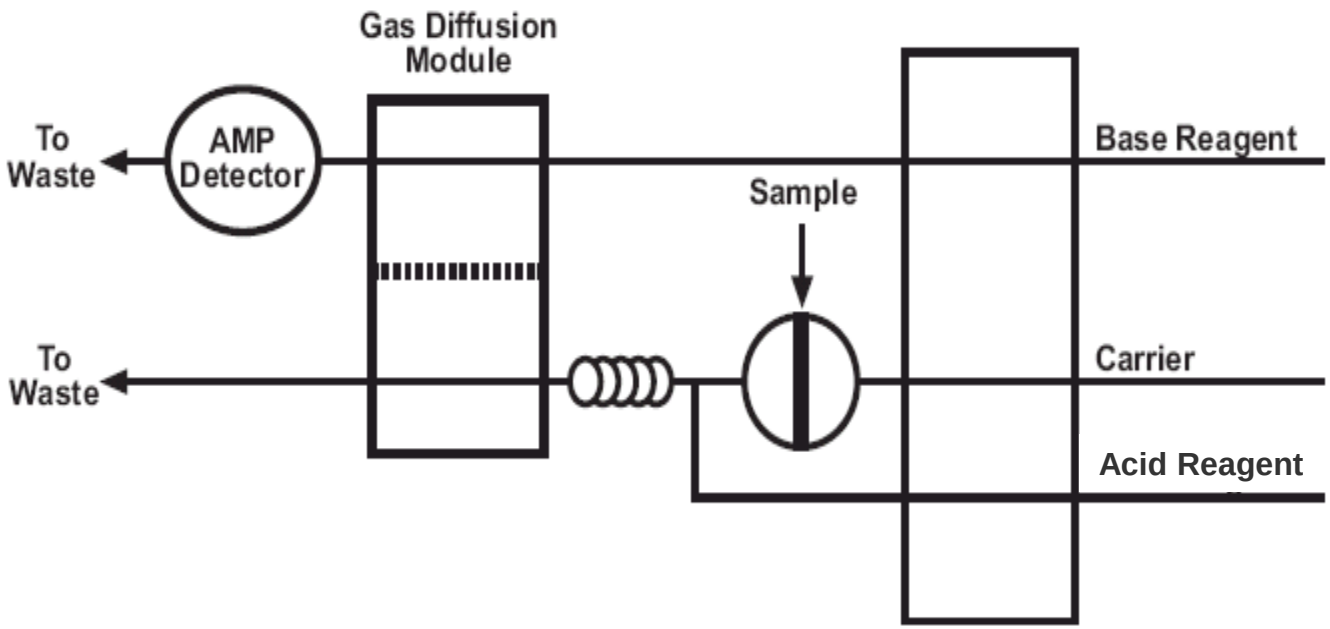

OIA 1677, ASTM D6888-04 or ASTM D7284-08

O·I·Analytical

Total Cyanide Methods – Manual Distillation

Method Number	Description	Measurement
SM 4500-CN C	Manual Macro Distillation – Mg Cl_2	Manual colorimetry / ISE
ASTM D 2036	Manual Macro Distillation – $MgCl_2$	Manual colorimetry, ISE, GD-amperometry, IC
EPA 335.4	Midi Distillation – $MgCl_2$	Automated Colorimetry
ASTM D 7284	Midi / Micro Distillation – $MgCl_2$	Gas Diffusion - Amperometry

O·I·Analytical

GD-Amperometry Equivalent to Colorimetry

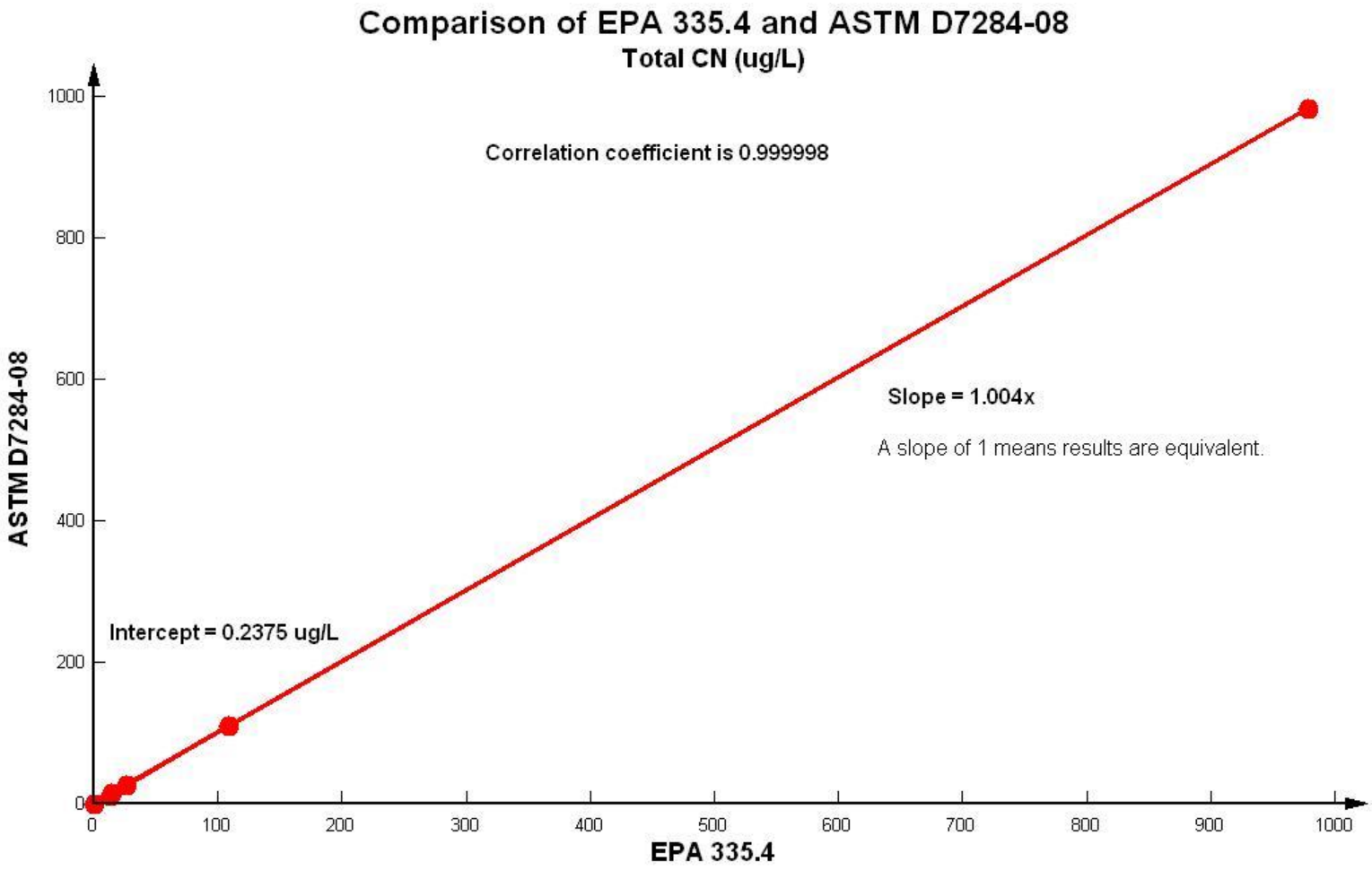

O·I·Analytical

Total Cyanide – Automated Methods

Method Number	Description	Measurement
ASTM D4374 (Kelada 01)	High power UV-Auto distillation Alkaline pH	Automated Colorimetry
EPA 335.3	Low power UV-Auto distillation pH <2	Automated Colorimetry
OIA 1678/ ASTM D7511-09	Low power UV-pH <2	Gas Diffusion - Amperometry

O·I·Analytical

No Distillation vs. Auto-Distillation

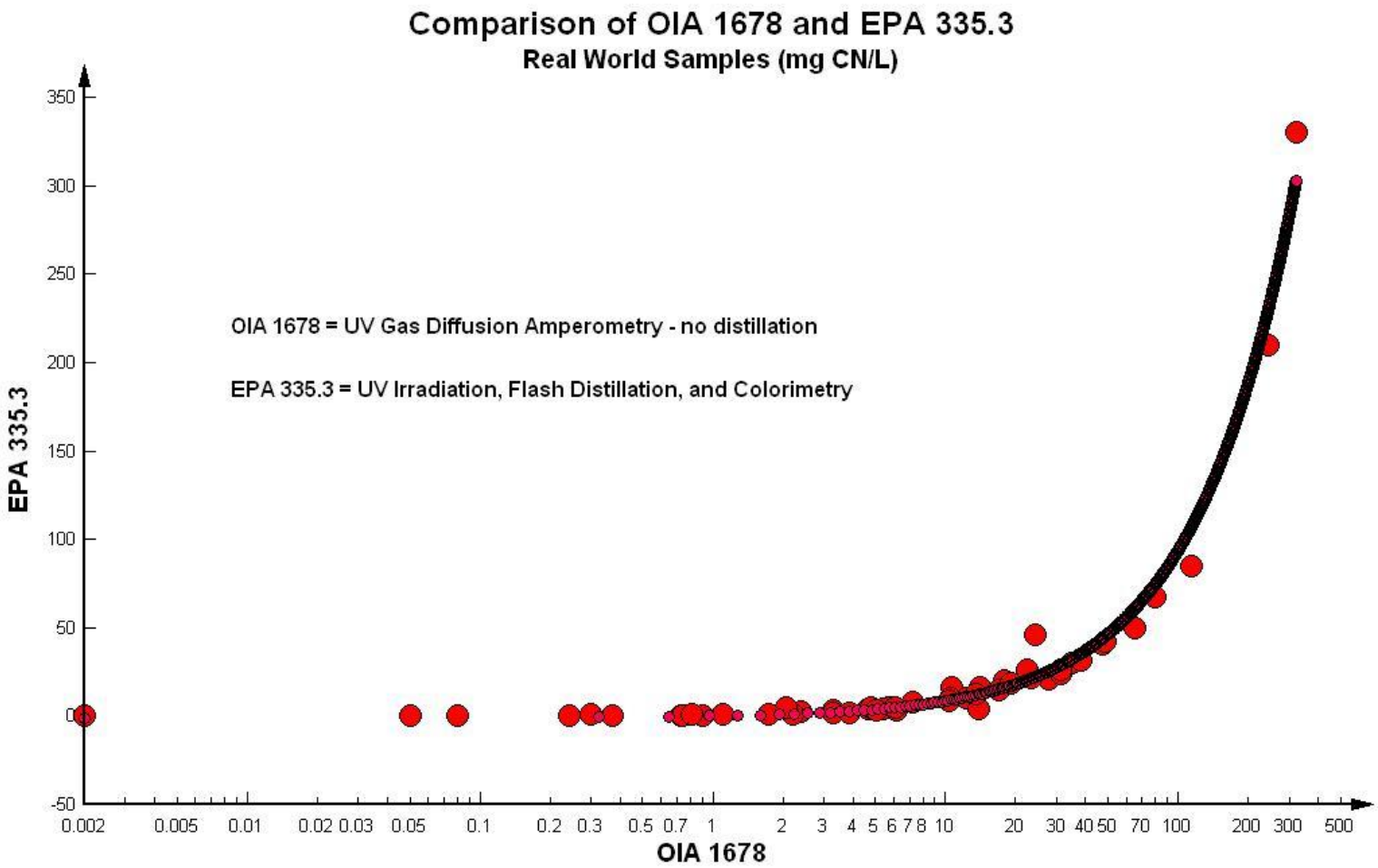

O·I·Analytical

No Distillation vs. Manual Distillation

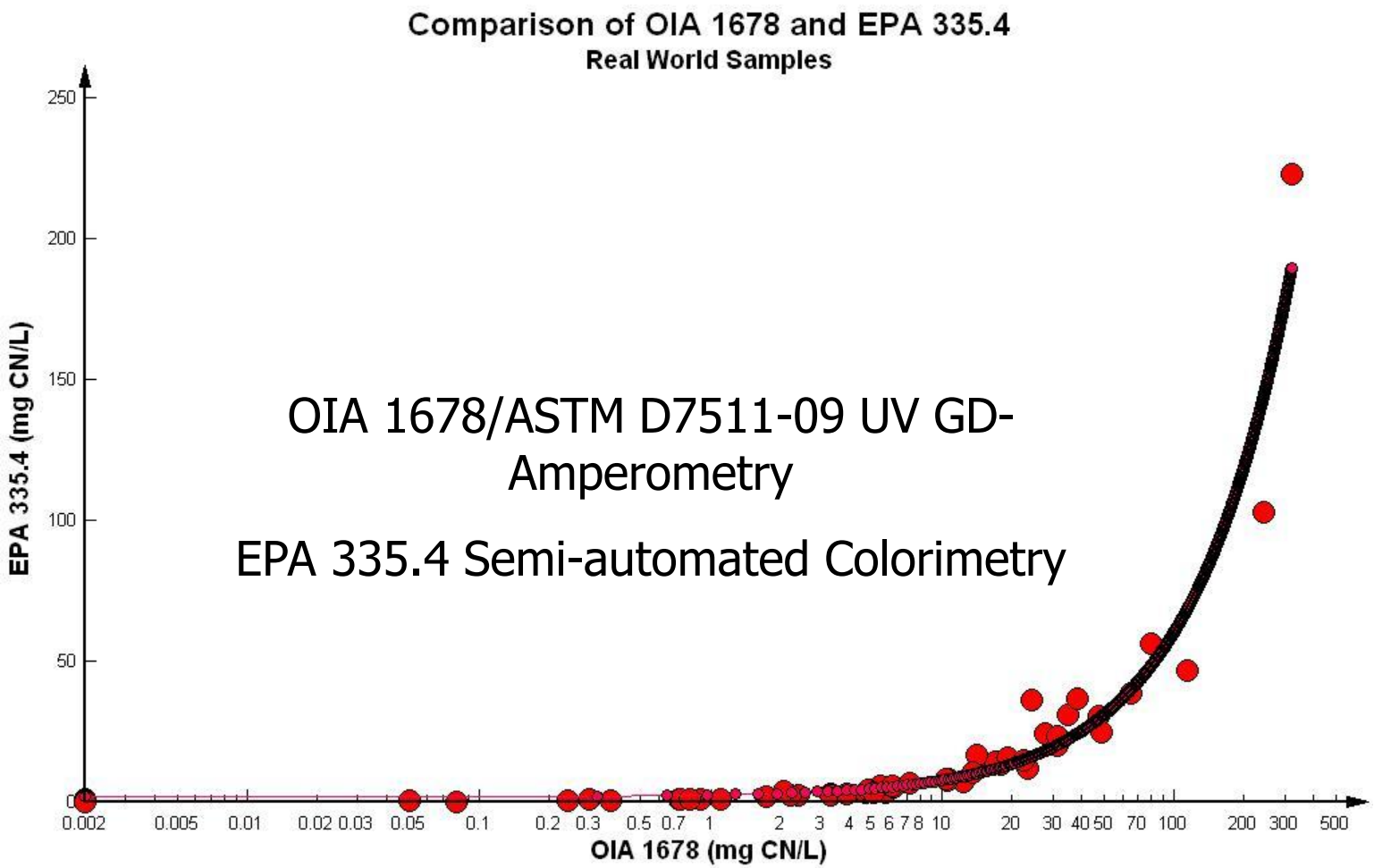

OIA 1678/ASTM D7511-09 UV GD-Amperometry

EPA 335.4 Semi-automated Colorimetry

O·I·Analytical

ASTM D7511-09 vs. ASTM D7284-08

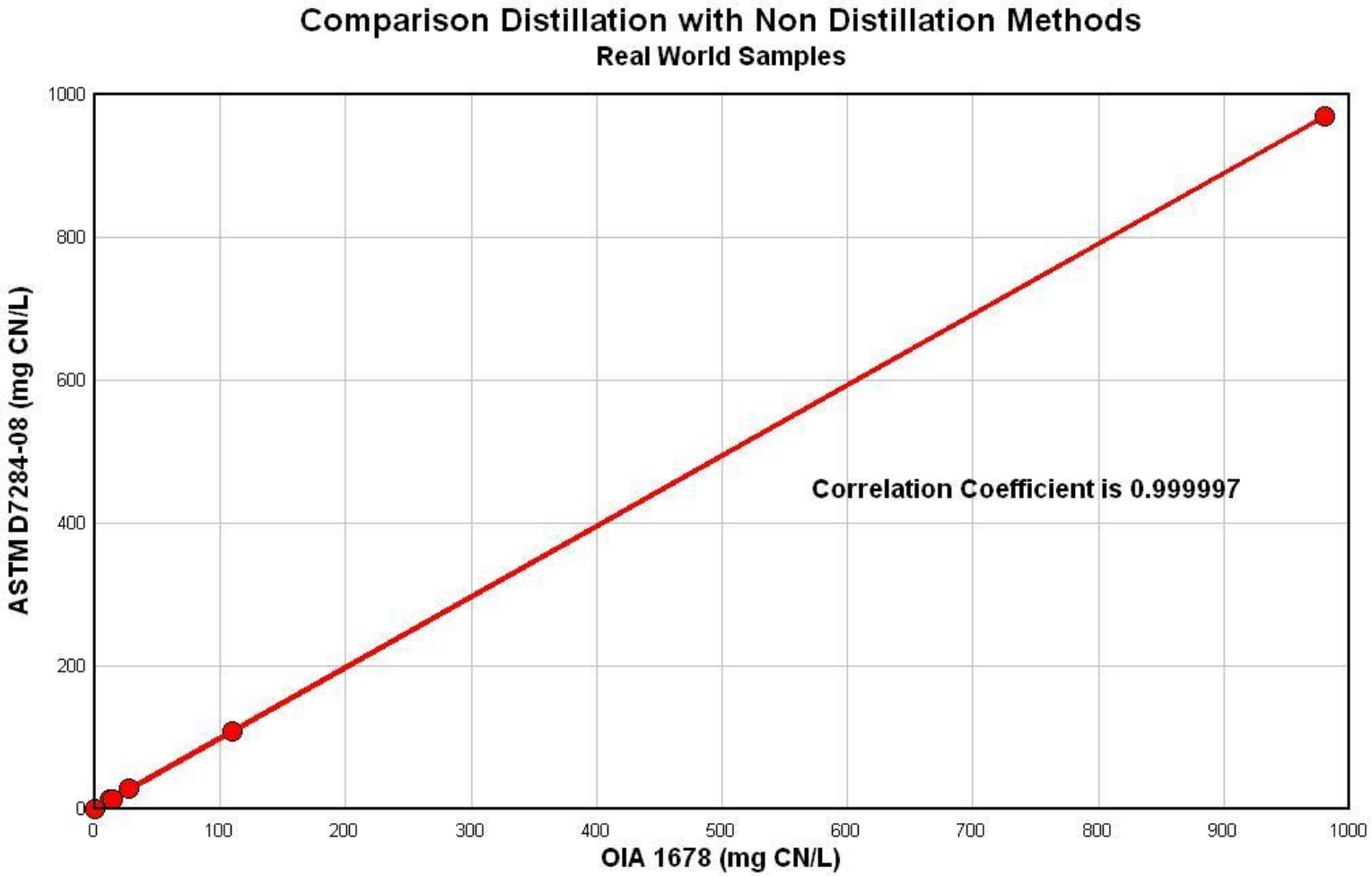

O·I·Analytical

Comparison of Total CN methods

	335.4	ASTM D7284	ASTM D7511
Sample Preparation	2 – 3 hour distillation	1 – 3 hour distillation	No distillation
Analysis	1 – 2 minutes	1 – 2 minutes	1 – 2 minutes
Total Time	3 – 4 hours	2 – 4 hours	1 – 2 minutes

O·I·Analytical

Easy to Use and Understand

No pyridine

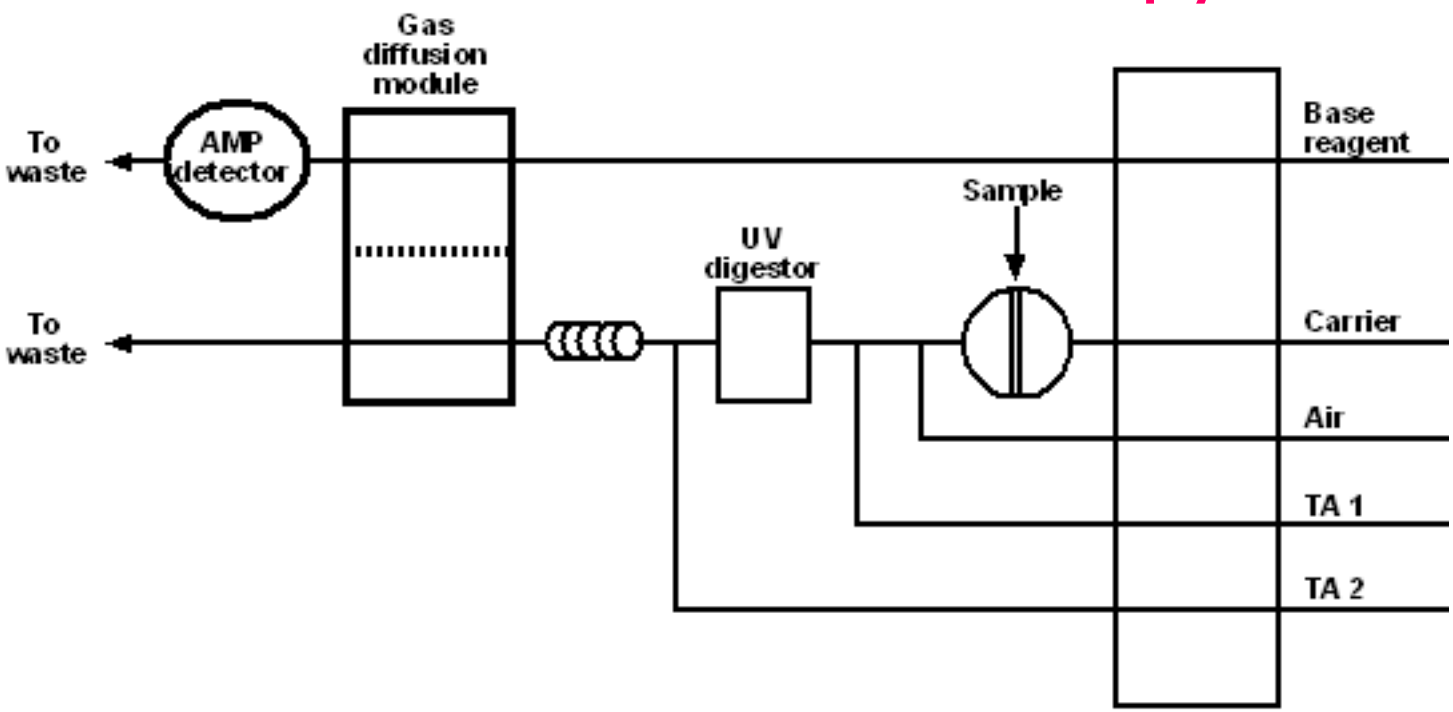

OIA 1678/ASTM D7511

O·I·Analytical

Comparison of Kelada and OIA 1678

	Kelada 01	ASTM D7511
Pump Tubes	15	5
Reagents	Pyridine	No Pyridine
Distillation	Yes	No
SCN Interaction	0.25 – 0.5 %	0.01 – 0.03 %

O·I·Analytical