O·I·Analytical
a xylem brand

Application Note 37890312

A New On-line Cyanide Analyzer for Measurement of Cyanide in Hydrometallurgical Processing of Precious Metal Ores

Keywords

CNSolution 9310 On-line Cyanide Analyzer
Cyanidation
Gas-diffusion Amperometry
Milling Solutions
Tailings
U.S. EPA Method OIA-1677

Introduction

Cyanidation is a hydrometallurgical process used to extract gold and silver from low grade ores by converting them to water soluble metal cyanide complexes for recovery by precipitation on zinc dust, activated carbon, or ion exchange resins. Measurement and control of cyanide concentration has a major impact on process efficiency and operating cost. Accurately measuring cyanide available for leaching ores containing copper and metallic sulfides is problematic. Titration methods commonly used for process control in gold leaching poorly estimate the amount of cyanide when copper is present. Other reaction products including thiocyanate, nitrate, nitrite, ammonia, and sulfur (IV) oxides interfere with most cyanide analysis methods.

A new on-line cyanide analyzer based on the gas-diffusion amperometry technique employed in U.S. EPA Method OIA-1677[1] and ASTM D 6888-09[2] has been developed. These methods have been demonstrated to be free of interferences in precious metal ore solutions.[3]

The CNSolution ™ 9310 on-line cyanide analyzer (Figure 1) measures cyanide and reports results that not only correlate, but are equivalent to results obtained by laboratory analysis. The analyzer is deployed near the sampling point enabling analysis within minutes, eliminating holding time concerns that complicate laboratory analysis of cyanide. Results are available immediately allowing plant operators to make decisions quickly rather than waiting hours or even days. Continuous monitoring yields a dynamic view of the process rather than periodic snapshots obtained by grab sampling and laboratory analysis.

Description of the Apparatus

The purpose of the instrument is to analyze cyanide in precious metal processing solutions by U.S. EPA Method OIA-1677. U.S. EPA OIA-1677 is a flow injection method that uses gas diffusion to separate cyanide after acidification, and measures cyanide using amperometric detection. OI Analytical manufactures a laboratory analyzer, the CNSolution™ 3100, on which the basic functionality of the on-line analyzer was modeled and to which performance data was compared. Table 1 summarizes the design specifications for an on-line cyanide analyzer in

Presented at the 2012 Pittsburgh Conference on Analytical Chemistry and Applied Spectroscopy, Orlando, Florida, March 11-15, 2012

comparison to a CNSolution™ 3100 laboratory analyzer.

Figure 1. CNSolution™ 9310 On-line Cyanide Analyzer

Table 1. Design Goals/Specifications for On-line Cyanide Analyzer

Operating Mode	CNSolution 3100 Laboratory Analyzer	On-line Cyanide Analyzer
FIA	a) Continuous flow b) Fixed loop volume injection c) Inert sample path d) No air segmentation	a) Continuous flow b) Fixed loop volume injection c) Inert sample path d) No air segmentation
Gas Diffusion	a) Sinusoidal path through polypropylene	a) Sinusoidal path through polypropylene
Amperometric Detection	a) Silver working electrode b) Continuously flowing acceptor solution	a) Silver working electrode b) Continuously flowing acceptor solution
Frequent Calibration	a) Multiple point calibration b) Calibration interval user defined	a) Two-point calibration b) Calibration interval user defined
Run Control Samples on Demand	a) Multiple control samples	a) Up to 2 control samples

While the analytical performance of the on-line analyzer is intended to be equivalent to a laboratory analyzer the process operating environment necessitates specialized design elements. The CNSolution™ 9310 has a sealed NEMA 4X water-tight, dust-tight electronics compartment. Operators may be untrained in laboratory analysis. The analyzer must be capable of several weeks of continuous operation without significant maintenance. For this reason, OI Analytical developed a flow injection manifold consisting of a polymeric mixing block to replace Teflon tubing and mixing coils, and employs solenoid driven micro-pumps as liquid drivers. There is one micro-pump for each of the three required reagents that provide a pulsed continuous flow to enhance sample and reagent mixing.

The injection volume is determined by a fixed volume loop. The same loop is used to inject standards, samples, and controls. Sample, calibration standard, or control sample injection is determined by software using a selector valve. Standards and controls are stored in plastic bottled near the instrument. Sample is carried to the instrument and aliquots are withdrawn from a spill and fill cup. Aliquots are pulled into an isolation loop using a glass syringe and isolation loop assembly. Once enough liquid is drawn, the syringe pushes the sample into the fixed volume-injection loop. Sample solution injected into the carrier stream reacts with acid, diffuses through the membrane and

is detected by the amperometric detector. Thus, the only departures from the laboratory OIA-1677 method hardware is replacement of peristaltic pump tubing with micro-pumps, and the use of a syringe/isolation loop to pull sample and fill the injection loop. See Figure 2 for schematics of the laboratory and online cyanide analyzer flow paths.

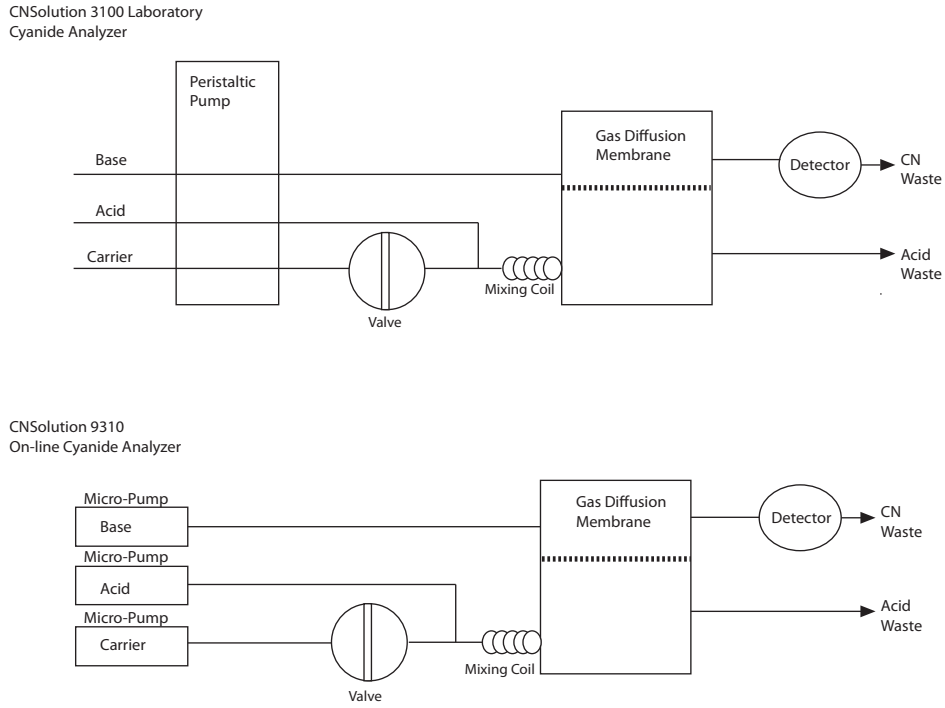

Figure 2. Schematics of the CNSolution 3100 Laboratory and CNSolution 9310 Online Analyzer Flow Paths

Results and Discussion

The CNSolution 9310 On-line Cyanide Analyzer obtains results that are equivalent to OIA-1677. Initial instrument performance was verified by the analysis of aqueous standards that span the calibration range. Five separate instruments were configured identically and used for the test. Table 2 summarizes the accuracy between the five instruments, and Table 3 summarizes repeatability for five replicates of each standard solution.

Table 2. Accuracy of 5 Different CNSolution 9310 On-line Analyzers

Standard	Instrument 1	Instrument 2	Instrument 3	Instrument 4	Instrument 5
2 ppm	2.17	1.95	2.12	1.95	2.14
5 ppm	5.25	5.04	5.03	4.93	5.40
10 ppm	10.2	10.3	9.50	10.1	10.7
20 ppm	21.5	20.3	19.4	20.5	20.7
50 ppm	50.7	49.5	48.5	49.5	50.5
100 ppm	101	99.6	96	101	104
200 ppm	199	193	198	205	201

Table 3. Repeatability (%RSD) of 5 Different CNSolution 9310 On-line Analyzers

Standard	Instrument 1	Instrument 2	Instrument 3	Instrument 4	Instrument 5
2 ppm	3.5	1.1	2.6	3.8	1.7
5 ppm	1.3	0.73	0.8	5.4	0.9
10 ppm	0.7	3.19	0.9	5.4	1.9
20 ppm	1.1	1.38	3.4	3.4	1.8
50 ppm	1.7	1.02	1.4	2.7	1.3
100 ppm	0.6	0.43	0.3	3.6	1.7
200 ppm	0.4	3.61	0.4	2.8	1.4

Data from Table 2 and Table 3 demonstrate that the instrument is accurate and precise in measuring aqueous standards across the 2 - 200 ppm calibration range.

Equivalency with U.S. EPA Method OIA-1677 was demonstrated by comparison of CNSolution 9310 results with laboratory results. Test samples were prepared by fortification of 7 separate aliquots of detoxified tailings solution with cyanide at the same concentrations tested in Tables 2 and 3. Results from partial analysis of the spiked matrix are shown in Table 4.

Table 4. Partial Analysis of Matrix Used to Establish Equivalency

Analyte	Result (mg/L)
pH	12.4 (S.U.)
NO_3-N	9.7
NH_3-N	13.0
OCN^-	196
SCN^-	206
TDS	8860

Figure 3 illustrates the relation between the CNSolution 9310 On-line Cyanide Analyzer and the CNSolution 3100 laboratory analysis. A correlation of 0.9996 with a slope of 1.0055 demonstrates the data are equivalent with no bias. The acceptance criterion of no difference greater than 10% between results was easily met.

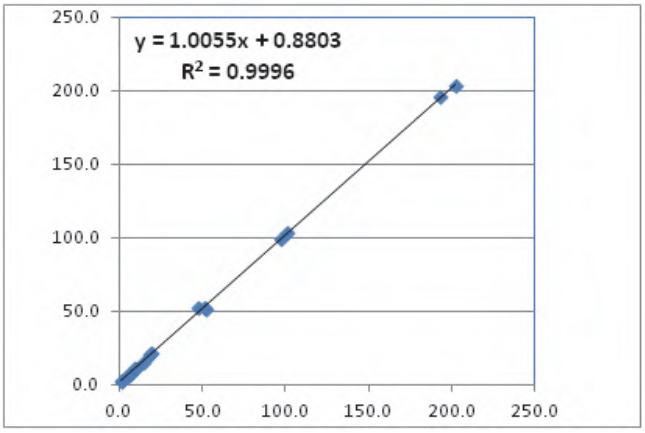

Figure 3. Plot of CNSolution 9310 On-line analyzer data versus CNSolution 3100 laboratory analyzer data

Summary and Conclusions

A new on-line cyanide analyzer, the CNSolution™ 9310 was developed for monitoring and process control of cyanide concentrations in precious metal milling solutions. The analyzer hardware, reaction chemistry and measurement technique duplicates U.S. EPA Method OIA-1677, a method proven to obtain accurate and reliable results in complex matrices. Testing of aqueous standards and fortified mill tailings solutions demonstrated that the analyzer produces results equivalent to laboratory analysis.

References

1. Method OIA-1677 Available Cyanide by Flow Injection, Ligand Exchange, and Amperometry, EPA-821-R-99-013; U.S. Environmental Protection Agency, August 1999.
2. Rapid Distillationless "Free Cyanide" Determination by a Flow Injection Ligand Exchange Method, Environmental Science and Technology, Vol. 29 No. 2, 426-430, 1995.

O·I·Analytical
a xylem brand

151 Graham Road
PO Box 9010
College Station, Texas
77842-9010

(979) 690-1711
(800) 653-1711 USA/Canada
FAX (979) 690-0440

www.oico.com
E-mail: oimail@oico.com

Publication 37890312